4-HIGH PRIMA-CAGE™
23.1 DEEP

CHORE-TIME®

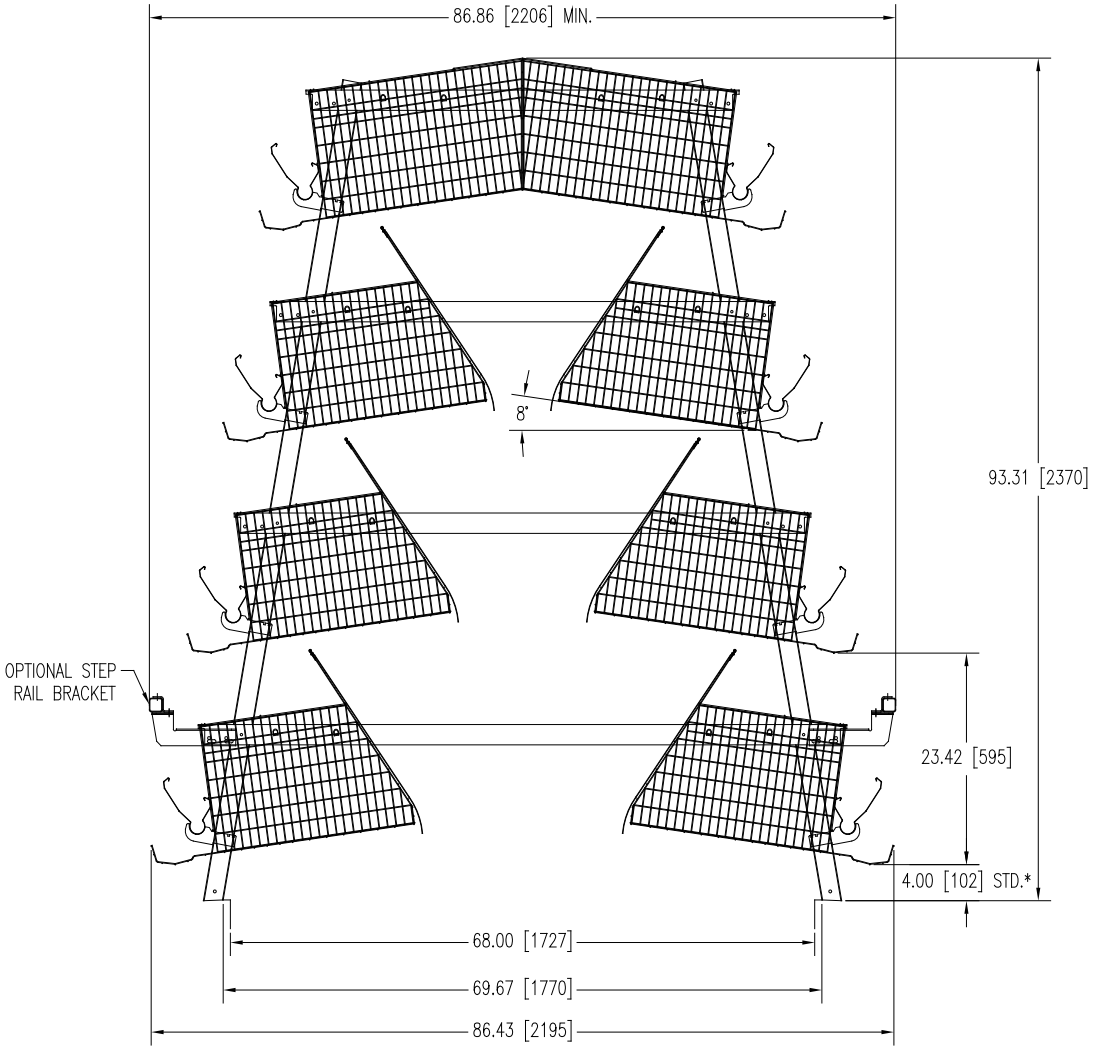

in[mm]

*EGG TRAY HEIGHTS AVAILABLE: 3.0 [76] - 10.5 [267]

STRAIGHT FRONT	CAGE WIDTH, SECTION LENGTH	FLOOR AREA	BIRDS PER CAGE	BIRD SPACE in²	BIRD SPACE cm²	SLANT FRONT
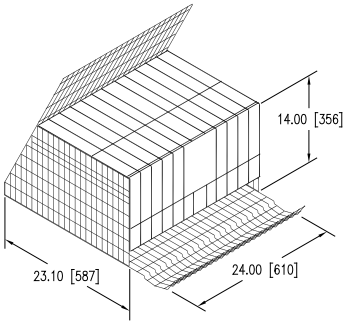 STANDARD	24" [610mm] 8' [2.44m]	554.4 in² 3576.77 cm²	8	69.3	447.10	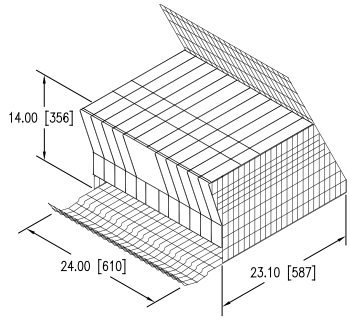 OPTIONAL
			9	61.6	397.42	
			10	55.4	357.68	